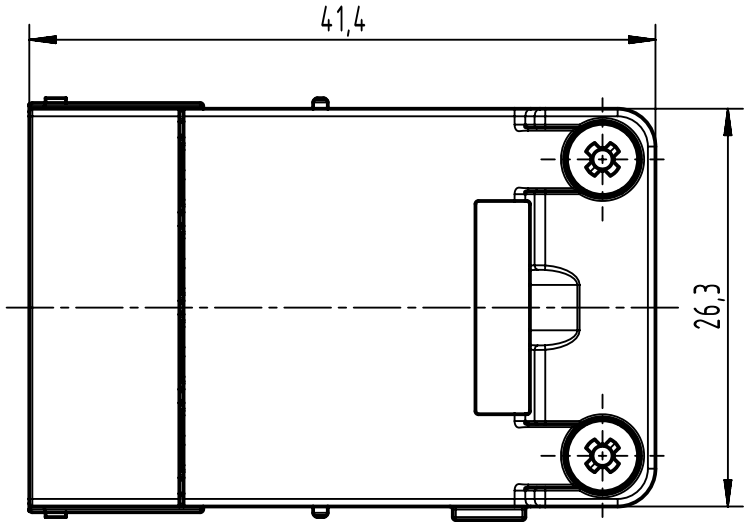

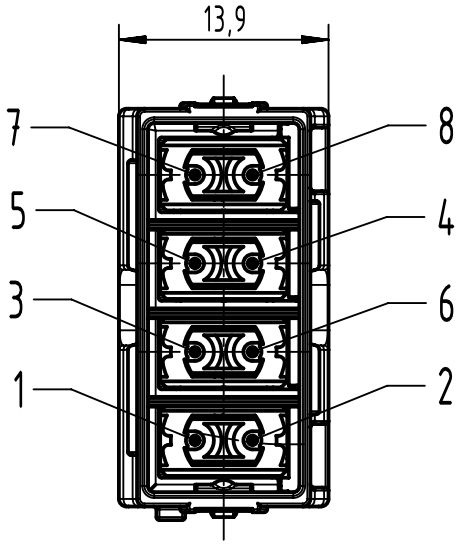

wiring acc. EIA/TIA 568A
view from termination side

brown	8 ●	● 7	brown/white
blue	4 ●	● 5	blue/white
orange	6 ●	● 3	orange/white
green	2 ●	● 1	green/white

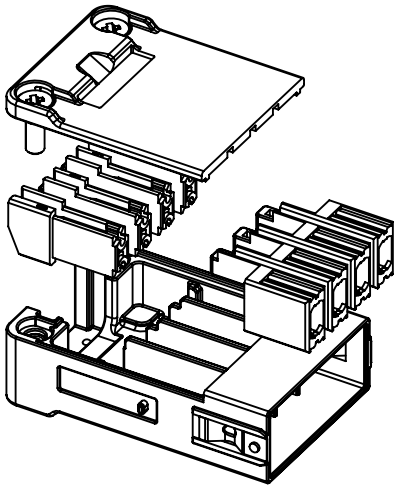

Kind of delivery: piece parts

All Dimensions in mm Original Size DIN A4	Scale 2:1	Free size tol.		Ref. Sub.	
All rights reserved Department EL PD	Created by SPREENB	Inspected by RIEPE	Standardisation	Date 2024-03-04	State Final Release
HARTING D-32339 Espelkamp	Title Han Gigabit HMC insert male				Doc-Key / ECM-Nr. 100642776/UGD/007/C 500000261440
	Type TB	Number 09 14 208 3011		Rev. C	Page 1/1

A4