Alle Rechte vorbehalten/ *All rights reserved*

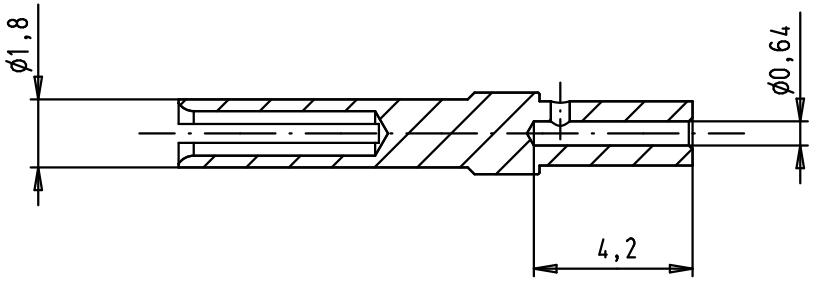

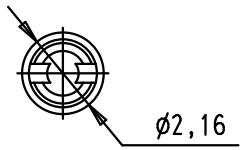

Crimping of AWG 24-28 : hand tool 09 99 000 0501
and locator 09 99 000 0531

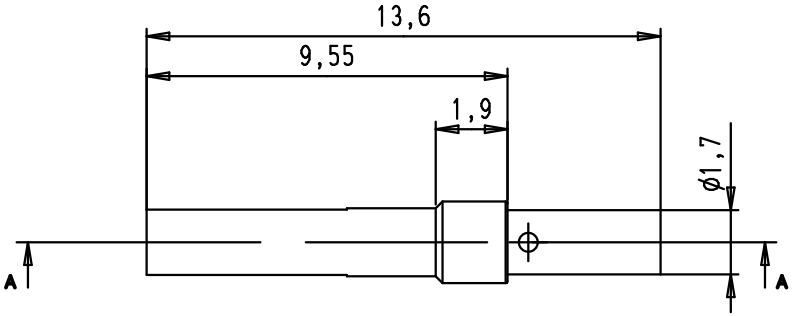

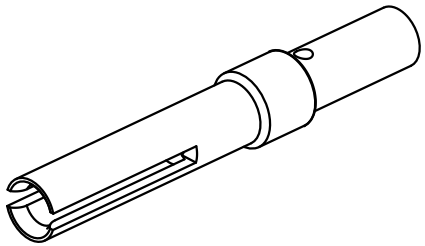

5000	09 67 000 7476 580	PL1
	09 67 000 7475 580	S4
100	09 67 000 7476	PL1
	09 67 000 7475	S4
Bulk packaging	Part number	Gold plating (over nickel)

Mod.	Dat.	Name
EC01739	29apr2010	LP
EC01656	12apr2010	LP

	Dat.	Name
Detail.	12apr2010	LP
Insp.		
Stand.		

All Dim. in mm
Orig. Size DIN A 4

HARTING EURL
F-95972 Paris

D-Sub *AWG 24-28*

female turned crimp contact

TB09 67 000 747x

Sub.

Maßstab/ *Scale* 5/1

Blatt/ *Page* 1/1